Elenberg LD-110

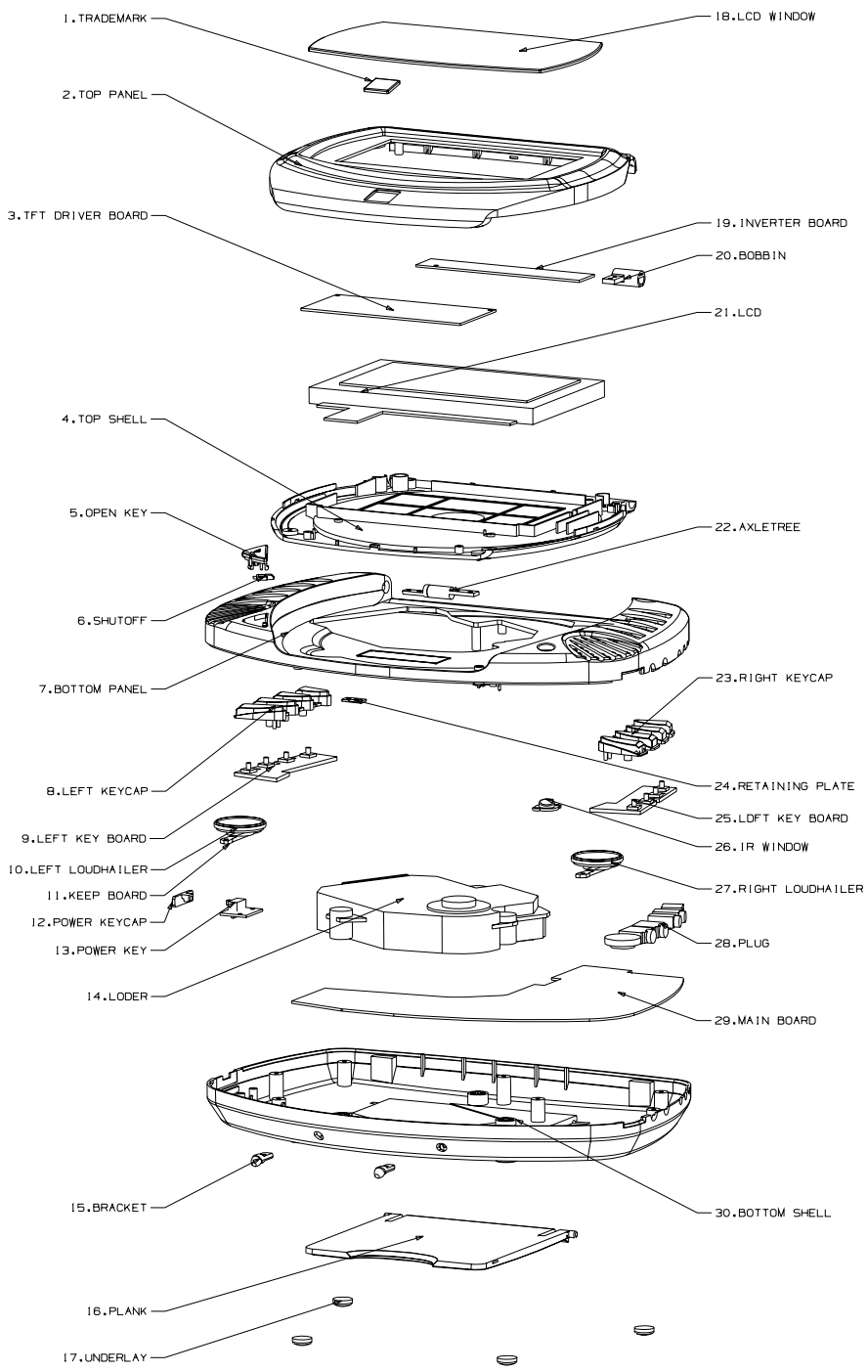

编号	名称及规格	数量	图号	标准代号	牌号 材料	毛坯	热处理	注
30	BOTTOM SHELL	1						
29	MAIN BOARD	1						
28	PLUG	5						
27	RIGHT LOUDHAILER	1						
26	IR WINDOW	1						
25	LDFT KEY BOARD	1						
24	RETAINING PLATE	1						
23	RIGHT KEYCAP	1						
22	AXLETREE	1						
21	LCD	1						
20	BOBBIN	1						
19	INVERTER BOARD	1						
18	LCD WINDOW	1						
17	UNDERLAY	4						
16	PLANK	1						
15	BRACKET	2						
14	LODER	1						
13	POWER KEY	1						
12	POWER KEYCAP	1						
11	KEEP BOARD	2						
10	LEFT LOUDHAILER	1						
9	LEFT KEY BOARD	1						
8	LEFT KEYCAP	1						
7	BOTTOM PANEL	1						
6	SHUTOFF	1						
5	OPEN KEY	1						
4	TOP SHELL	1						
3	TFT DRIVER BOARD	1						
2	TOP PANEL	1						
1	TRADEMARK	1						

标记	处数	更改文件号	签名	日期
设计				
审核				
工艺				
批准				

PD 420
爆炸图

设备名称

图样标记 重量 比例

第 张 共 张

天津通信广播公司 有限厂

图幅: 1

旧底图总号

底图总号

日期 签名

S2172-2 MAINBOARD BOM

ITEM	TYPE	PACKAGE. DESCRIPTION CODE	QUN	PCS	LOCATION	CORP
1	RESIST	0Ω ±5% 0603	4	PCS	R18,R38,R56,R59	
2	RESIST	1Ω ±5% 0603	5	PCS	R50,R71,R72,R73, R74	
3	RESIST	4.7Ω ±5% 0603	4	PCS	R65,R66,R138, R139	
4	RESIST	6.8Ω ±5% 0603	1	PCS	R45	
5	RESIST	10Ω ±5% 0603	4	PCS	R55,R57,R63,R64	
6	RESIST	33Ω ±1% 0603	5	PCS	R85,R86,R87,R88,R156	
7	RESIST	75Ω ±1% 0603	3	PCS	R96,R100,R101	
8	RESIST	100Ω ±5% 0603	2	PCS	R120,R111	
9	RESIST	390Ω ±5% 0603	1	PCS	R30	
10	RESIST	560Ω ±5% 0603	1	PCS	R53	
11	RESIST	1kΩ ±5% 0603	5	PCS	R28,R31,R34,R140, R142	
12	RESIST	1.5kΩ ±5% 0603	2	PCS	R81,R82	
13	RESIST	2kΩ ±5% 0603	1	PCS	R27	
14	RESIST	2kΩ ±1% 0603	1	PCS	R153	
15	RESIST	3kΩ ±5% 0603	1	PCS	R29	
16	RESIST	3.3kΩ ±5% 0603	1	PCS	R116	
17	RESIST	4.7kΩ ±5% 0603	7	PCS	R32,R44,R62,R121,	
18					R130,R134, R124	
19	RESIST	5.1kΩ ±5% 0603	3	PCS	R119,R110,R128	
20	RESIST	10kΩ ±1% 0603	3	PCS	R5,R11,R16	
21	RESIST	10kΩ ±5% 0603	23	PCS	R7,R8, R9, R12, R13,	
22					R14,R21,R33,R54,	
23					R58,R70,R77,R80,	
24					R89,R90,R109,R113,	
25					R118 ,R137, R159	
26					R154,R155,R157	
27	RESIST	11.8kΩ ±1% 0603	1	PCS	R131	
28	RESIST	13kΩ ±5% 0603	1	PCS	R158	
29	RESIST	15kΩ ±5% 0603	2	PCS	R69,R43	
30	RESIST	16.5kΩ ±1% 0603	1	PCS	R15	
31	RESIST	18kΩ ±1% 0603	1	PCS	R26	
32	RESIST	20kΩ ±5% 0603	6	PCS	R3,R6,R75,R76,R78,	
33					R79	

ITEM	TYPE	PACKAGE. DESCRIPTION CODE	QUN	PCS	LOCATION	CORP
1	RESIST	29k±1% 0603	1	PCS	R2	
2	RESIST	30k±1% 0603	1	PCS	R1	
3	RESIST	33k±5% 0603	1	PCS	R68	
4	RESIST	68k±5% 0603	2	PCS	R129,R67	
5	RESIST	150k±5% 0603	2	PCS	R41,R40	
6	RESIST	100k±5% 0603	12	PCS	R4,R39,R46,R106,	
7					R107,R114, R152	
8					R123,R132,R133,	
9					R135,R141	
10	RESIST	180k±5% 0603	2	PCS	R122,R112	
11	RESIST	680k±5% 0603	2	PCS	R42,R37	
12	RESIST	750k±5% 0603	1	PCS	R36	
13	RESIST	33R (RN8)	1	PCS	RN1	
14	CAPACITOR	16V-20pF±5% 0603	1	PCS	C37	
15	CAPACITOR	16V-22pF±5% 0603	5	PCS	C54,C55,C81,C91,C93	
16	CAPACITOR	16V-47pF±5% 0603	2	PCS	C82,C83	
17	CAPACITOR	16V-100pF±5% 0603	1	PCS	C63	
18	CAPACITOR	16V-150pF±5% 0603	2	PCS	C74,C75	
19	CAPACITOR	16V-220pF±5% 0603	2	PCS	C100,C105	
20	CAPACITOR	16V-270pF±10% 0603	3	PCS	C22,C89,C94	
21	CAPACITOR	16V-330pF±10% 0603	4	PCS	C69,C70,C90,C95	
22	CAPACITOR	16V-390pF±10% 0603	1	PCS	C30	
23	CAPACITOR	16V-1000pF±10% 0603	4	PCS	C44,C73,C103,C106	
24	CAPACITOR	16V-1500pF±10% 0603	2	PCS	C40,CM2	
25	CAPACITOR	16V-2200pF±10% 0603	6	PCS	CM8,C31,C35,	
26					C43,C102,C107	
27	CAPACITOR	16V-16800pF±10% 0603	1	PCS	C47	
28	CAPACITOR	16V-103±10% 0603	5	PCS	CM1,CM7,C8,C114,	
29					C34	
30						
31	CAPACITOR	16V-153±10% 0603	1	PCS	C72	
32	CAPACITOR	16V-333±10% 0603	1	PCS	C49	
33						
34						
35						
36						

ITEM	TYPE	PACKAGE. DESCRIPTION CODE	QUN	PCS	LOCATION	CORP
1	CAPACITOR	16V-473±10% 0603	2	PCS	C50,C51	
2	CAPACITOR	25V-104-20~80% 0603	62	PCS	CB1,CB2,C2,CB3,CB4,	
3					CB5,C5,CB6,CB7,CB8,	
4					,CB12,CB13,C13,CB15,	
5					CB18,C18,CB19,CB20,	
6					C23,CB24,C24,CB25,	
7					CB35,CB36,C36,CB37,	
8					CB45,C46,C48,C52,C53	
9					C71,C112,C118,C121,	
10					C132,C3,C20,C14	
11					CB9,CB10,CB11,C11	
12					CB16,C16,CB17,	
13					CB26,C26,C28,C33,	
14					C56,C65,C66,C68,	
15					CB21,CB22,	
16					CB38,CB39,CB43,	
17					C128,C130,C131,	
18						
19	CAPACITOR	16V-224-20~80% 0603	4	PCS	C113,C115,C123,C124	
20	CAPACITOR	16V-474-20~80% 0603	1	PCS	C120	
21	CAPACITOR	16V-105-20~80% 0603	6	PCS	C57,C58,C59,C60,C61,	
22					C64	
23	CAPACITOR	16V-105-10% 0603	1	PCS	C21	
24	CAPACITOR	25V-10uF-20%~80% CD11X	3	PCS	CM3,CM10,C38	
25						
26	CAPACITOR	25V-47uF-20%~80% CD11X	8	PCS	CE3,C10,C12,C19,C25,	
27					C27,C29,C127	
28	CAPACITOR	25V-220uF-20%~80% CD11X	1	PCS	C4	
29	CAPACITOR	16V-10uF-20%~80% CD11X	6	PCS	CE1,CE19,CE20,CE21,	
30					CE22,C108	
31	CAPACITOR	16V-47uF-20%~80% CD11X	9	PCS	CE6,CE7,CE8,CE11,CE12,	
32					CE15,C15,CE18,CE14	
33	CAPACITOR	10V-470uF-20%~80% CD11X	1	PCS	CE10	
34	CAPACITOR	10V-4.7uF-20%~80% CD11X	2	PCS	C116,C117	
35	CAPACITOR	10V-22uF-20%~80% CD11X	2	PCS	CM5,CM11	
36	CAPACITOR	10V-47uF-20%~80% CD11X	4	PCS	C7,CE23,C104,C129	
37	CAPACITOR	10V-100uF-20%~80% CD11X	5	PCS	CE4,C9,CE13,C17,C119	

ITEM	TYPE	PACKAGE. DESCRIPTION CODE	QUN	PCS	LOCATION	CORP
1	CAPACITOR	10V-220uF-20%~80% CD11X	5	PCS	C1,C6,C122,C125,C101	
2	CAPACITOR	10V 1000uF-20%~80% CD11X	1	PCS	CE5	
3	CAPACITOR	6.3V 47uF-20%~80% CD11X	2	PCS	CE2,CE9	
4	CAPACITOR	10uF 25V±10% 1210	3	PCS	CM12,CM13,CM14	
5	CAPACITOR	10uF 10V±10% 0805	1	PCS	C39	
6	INDUCTOR	6.8uH 1A CR54	2	PCS	LM4，LM2	
7	INDUCTOR	22uH 2A 220LA	2	PCS	LM3,LM1	
8	INDUCTOR	22uH 0.5A CR54	2	PCS	LM5,LM6	
9	INDUCTOR	1.8uH 0805	3	PCS	L18，L20，L21	
10	INDUCTOR	10uH 1210	4	PCS	L7，L12，L15，L11	
11	INDUCTOR	22uH 0805	3	PCS	L1,L2,L3	
12	INDUCTOR	220Z L0805	14	PCS	L4,F4,L5,L6,F7,L8,L9,L10，	
13					F10,F11,L13,L14,L16,F1	
14		50k±20%,50V,0.03W,（3PIN）	1	PCS	VJ1	
15	DIODE	1N4148 D1812	2	PCS	D2,D14	
16	DIODE	1N5819 SOD123	1	PCS	D5	
17	DIODE	BAV99 SOT-23	2	PCS	D13,D8	
18	DIODE	BAT54C SOT23	1	PCS	D1	
19	DIODE	B140B D5817	3	PCS	D3,D4,D6	
20	DIODE	B230A D5817	2	PCS	DM1,DM2	
21	TRANSISTOR	2N3904 SOT-23	6	PCS	Q5,Q6,Q15,Q17,Q18,Q24	
22	TRANSISTOR	2N3906 SOT-23	4	PCS	Q7,Q14,Q16,Q23	
23	TRANSISTOR	2SB1132 SOT-89	2	PCS	Q8,Q9	
24	MOS	A03402 SOT-23	1	PCS	Q4	
25	IC	EEPROM 24C16	1	PCS	U9	
26	IC	ESMT SDRAM 1M×16×4	1	PCS	U10	
27	IC	BL58054	1	PCS	U8	
28	IC	RT9164 (1.8V)	1	PCS	U3	
29	IC	4060	2	PCS	UM1,UM2	
30	IC	MB3800	1	PCS	U5	
31	IC	MT1389D	1	PCS	U7	
32	IC	SM7511L	1	PCS	U15	
33	IC	NJM4558	1	PCS	U12	
34	IC	STM29W160/MX29LV800(160)	1	PCS	U11	
35						
36						

ITEM	TYPE	PACKAGE. DESCRIPTION CODE	QUN	PCS	LOCATION	CORP
1	REMOTE CONTROL	AT138BV3（3PIN,3.3V,）	1	PCS		
2						
3						
4	CRYSTAL	27M CL=20P	1	PCS	Y1	
5						
6	EARPHONE	JS1212-3520D5	2	PCS	JP10，JP14	
7	DC	DC-006-Φ1.35	1	PCS	JP2	
8	SW_SWTAAA	ESE11MV9 HIGH.5mm	1	PCS	SW1	
9	AUDIO OUTPUT	ST-019(5PIN)	2	PCS	JP9	
10	VEDIO OUTPUT	SH-321(4PIN)	1	PCS	JP15	
11						
12	TRANSFORM	7D37-8	1	PCS	U4	
13	CHOKE	CPFC74	1	PCS	IND1	
14	JACK	2PIN/1.25/SOJ	3	PCS	JP6,SPR1,SPL2	
15						
16	JACK	3PIN/1.25/SOJ	1	PCS	JP3	
17						
18	JACK	4PIN/1.25/SOJ	2	PCS	JP11,JP12	
19						
20	JACK	10PIN/1.25/SOJ	1	PCS	JP1	
21				PCS		
22	JACK	PH2.0-2PIN	1	PCS	JP4	
23	JACK	PH2.0-4PIN	1	PCS	JP5	
24	FFC JACK	24PIN/0.5/SOP,	1	PCS	JP7	
25	FUSE	5A,1206	1	PCS	FUSS1	
26						
27						
28						
29						
30						
31						
32						
33						
34						
35						
36						

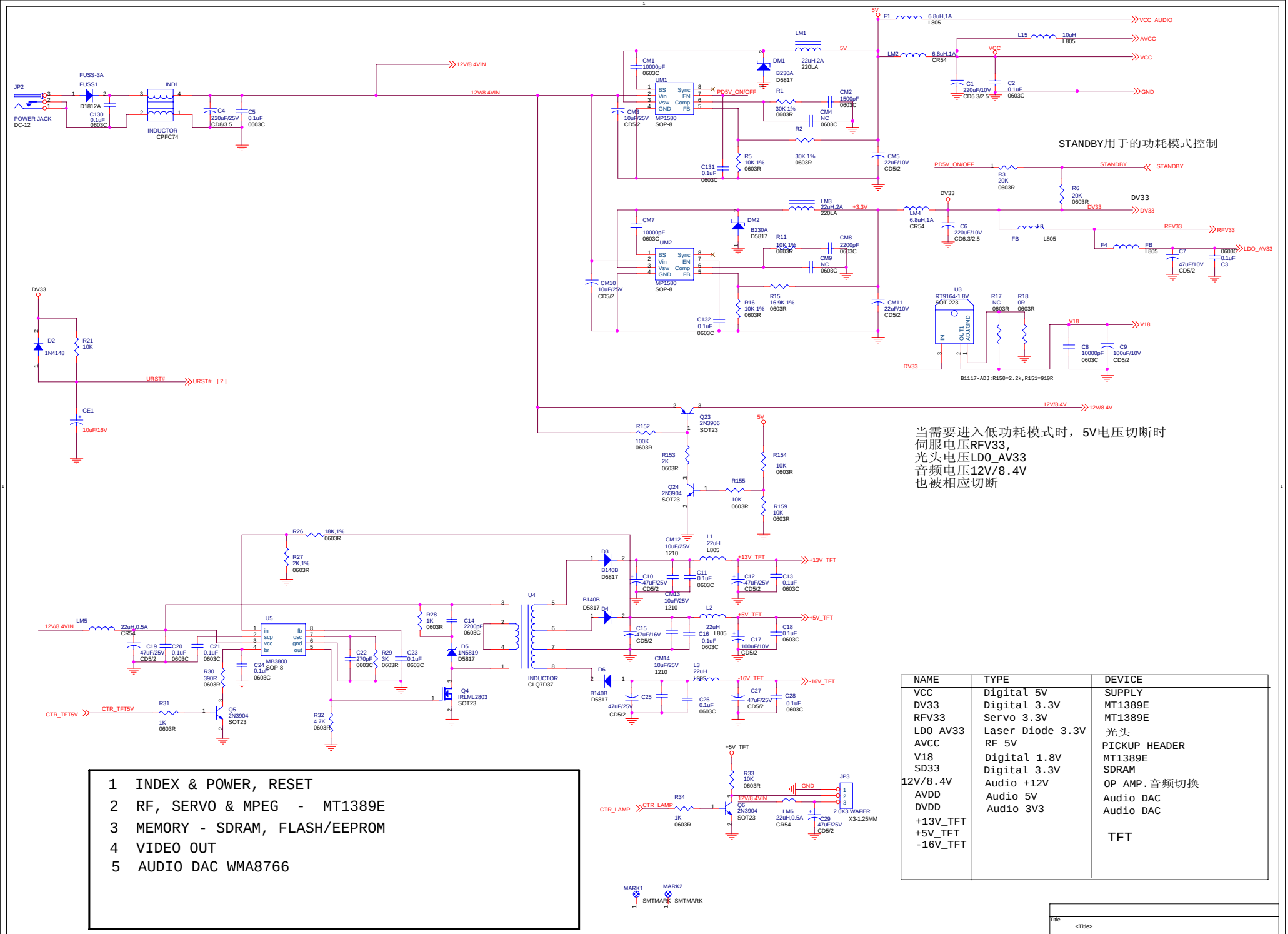

NAME	TYPE	DEVICE
VCC	Digital 5V	SUPPLY
DV33	Digital 3.3V	MT1389E
RFV33	Servo 3.3V	MT1389E
LDO_AV33	Laser Diode 3.3V	光头
AVCC	RF 5V	PICKUP HEADER
V18	Digital 1.8V	MT1389E
SD33	Digital 3.3V	SDRAM
12V/8.4V	Audio +12V	OP AMP.音频切换
AVDD	Audio 5V	Audio DAC
DVDD	Audio 3V3	Audio DAC
+13V_TFT		
+5V_TFT		TFT
-16V_TFT		

1 INDEX & POWER, RESET
2 RF, SERVO & MPEG - MT1389E
3 MEMORY - SDRAM, FLASH/EEPROM
4 VIDEO OUT
5 AUDIO DAC WMA8766

Title	<Title>	
Size C	Document Number <Doc>	Rev <RevCode>
Date: Wednesday, July 13, 2005	Sheet 1 of 6	

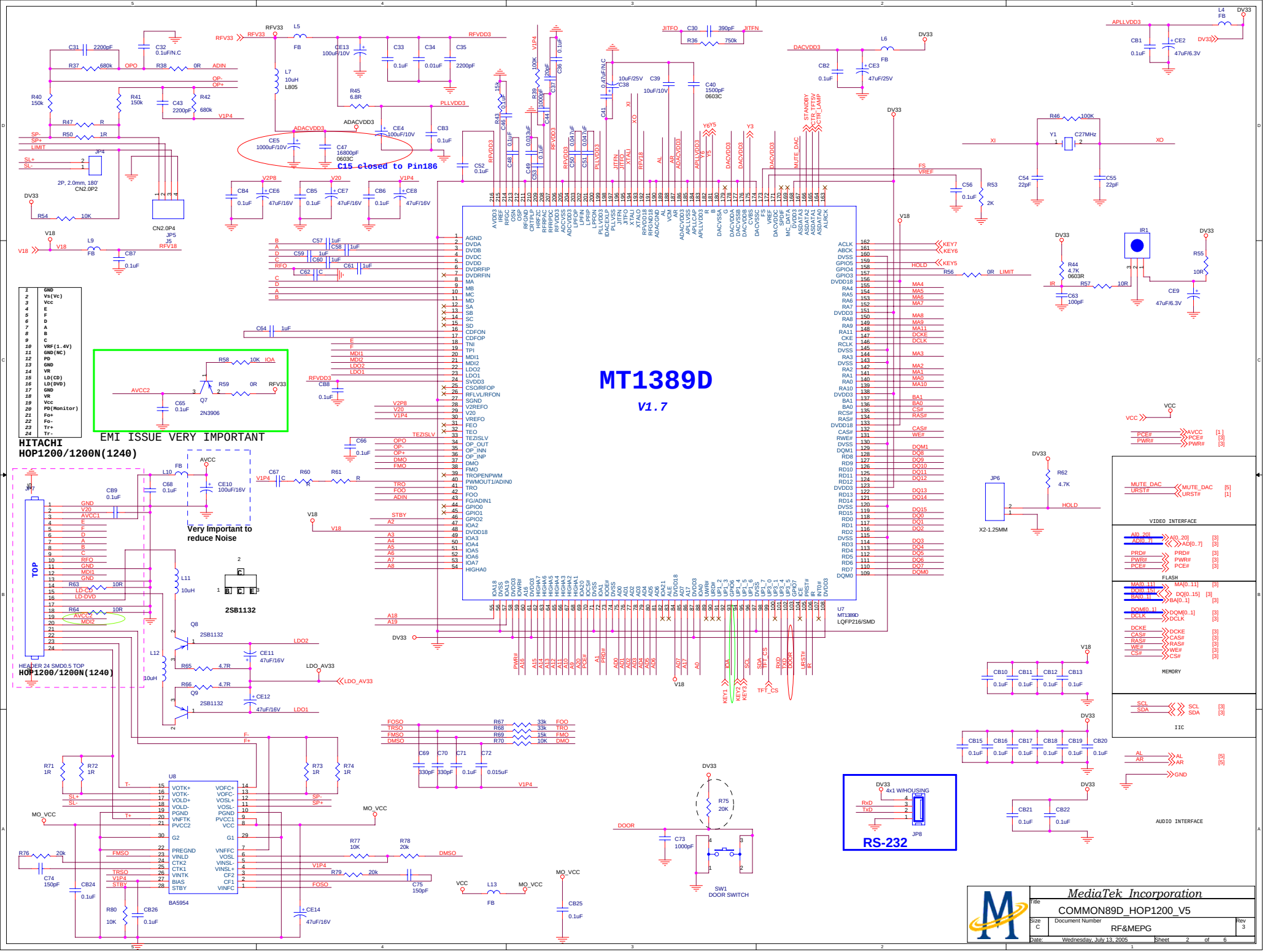
MT1389D
V1.7
C15 closed to Pin186
EMI ISSUE VERY IMPORTANT
HITACHI
HOP1200/1200N(1240)
Very Important to reduce Noise
HOP1200/1200N(1240)
RS-232
U7
MT1389D
LQFP216/SMD
U8
BA5954
2SB1132
2N3906
X2-1.25MM
JP6
JP8
SW1
DOOR SWITCH
VIDEO INTERFACE
FLASH
MEMORY
IIC
AUDIO INTERFACE
MediaTek Incorporation
COMMON89D_HOP1200_V5
RF&MEPG
Size C
Document Number
Rev 3
Date: Wednesday, July 13, 2005
Sheet 2 of 6

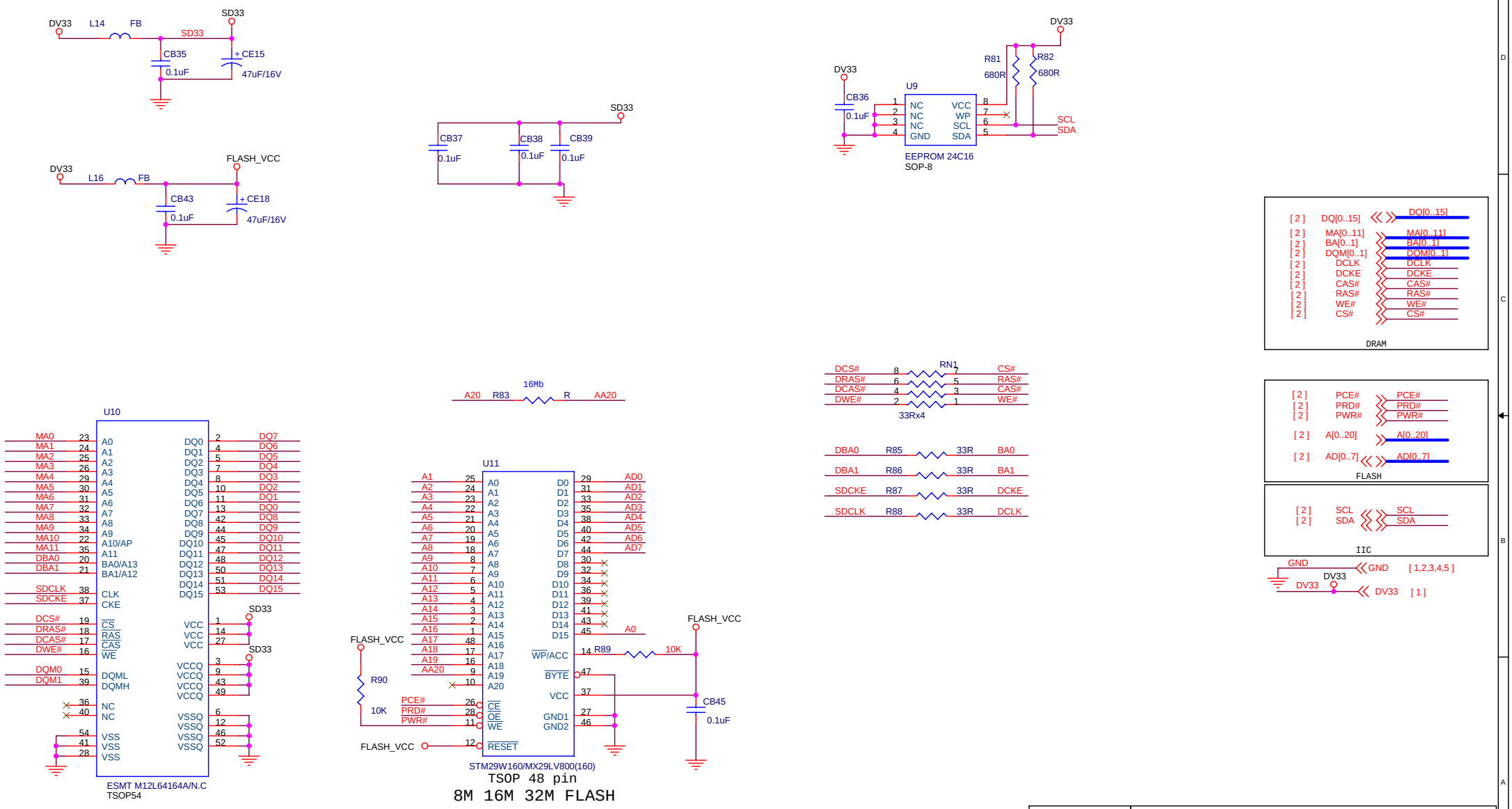

MediaTek Incorporation			
Title	COMMON89D_HOP1200_V5		
Size B	Document Number SDRAM&FLASH		Rev 3
Date: Wednesday, July 13, 2005	Sheet 3 of 6		

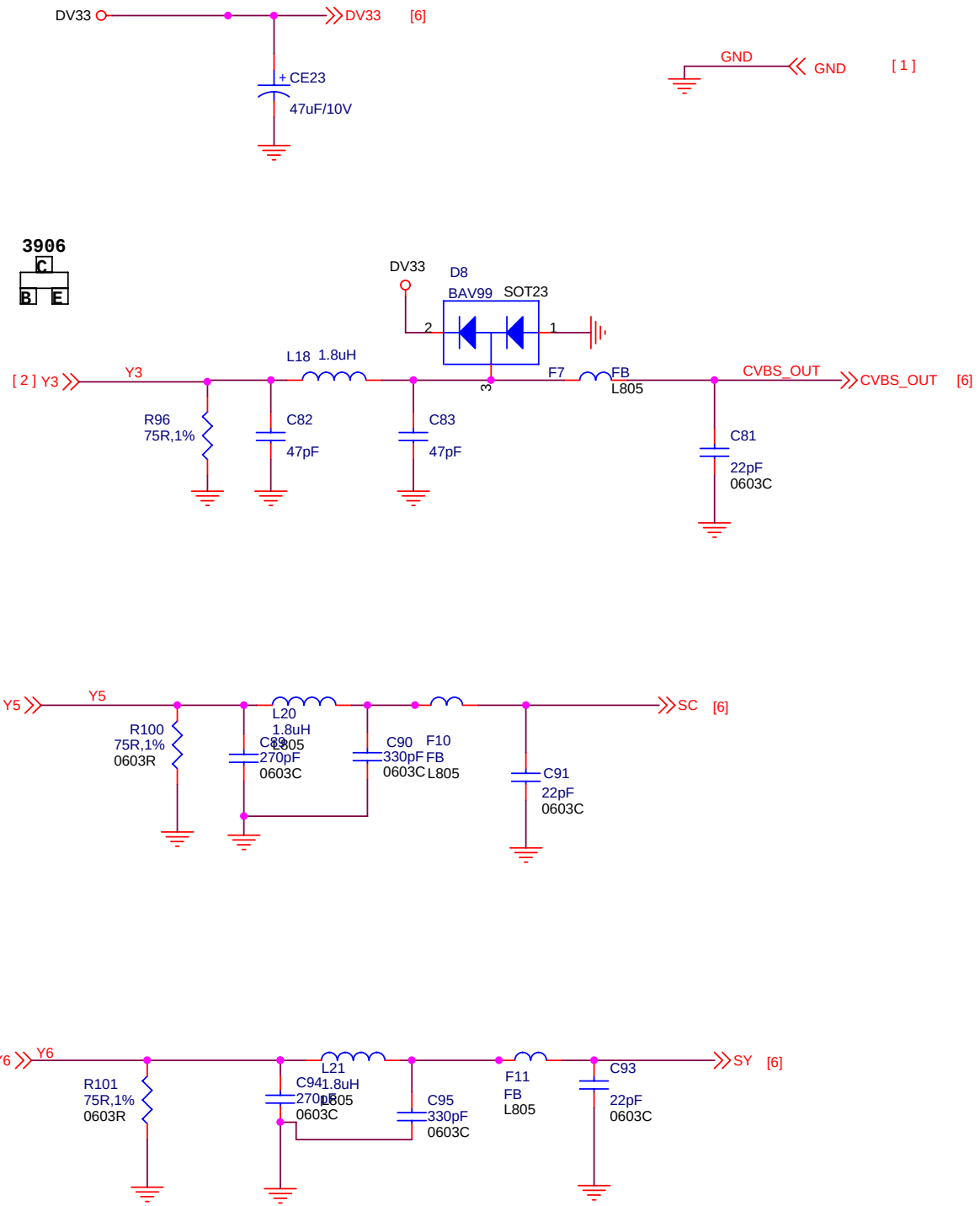

MediaTek Incorporation

Title: COMMON89D_HOP1200_V5

Size: A4 | Document Number: VIDEO OUT PORT | Rev: 3

Date: Wednesday, July 13, 2005 | Sheet 4 of 6

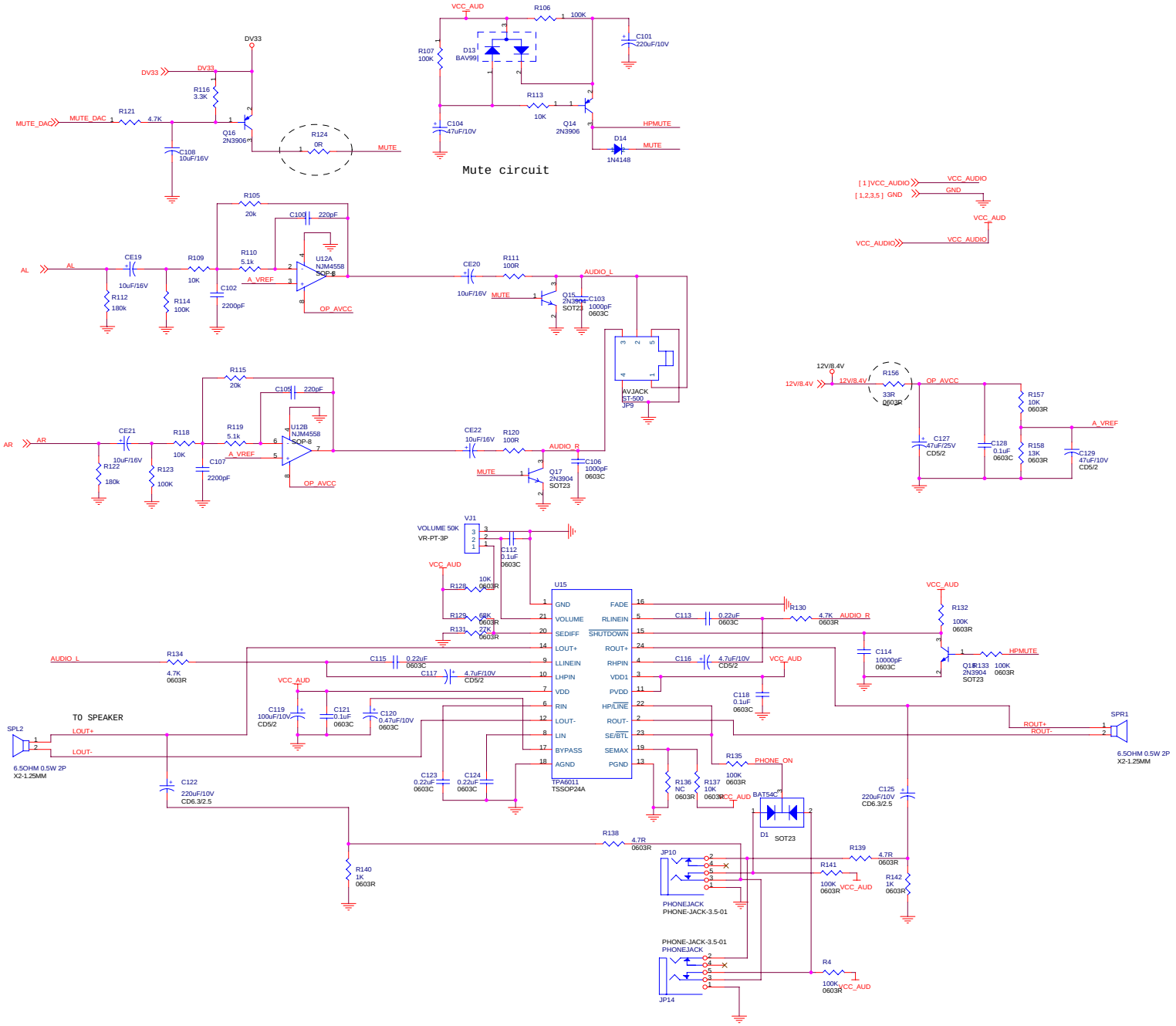

MediaTek Incorporation		
Title	COMMON89D_HOP1200_V5	
Size A2	Document Number AUDIO OUT PORT	Rev 3
Date: Wednesday, July 13, 2005	Sheet 5 of 6	

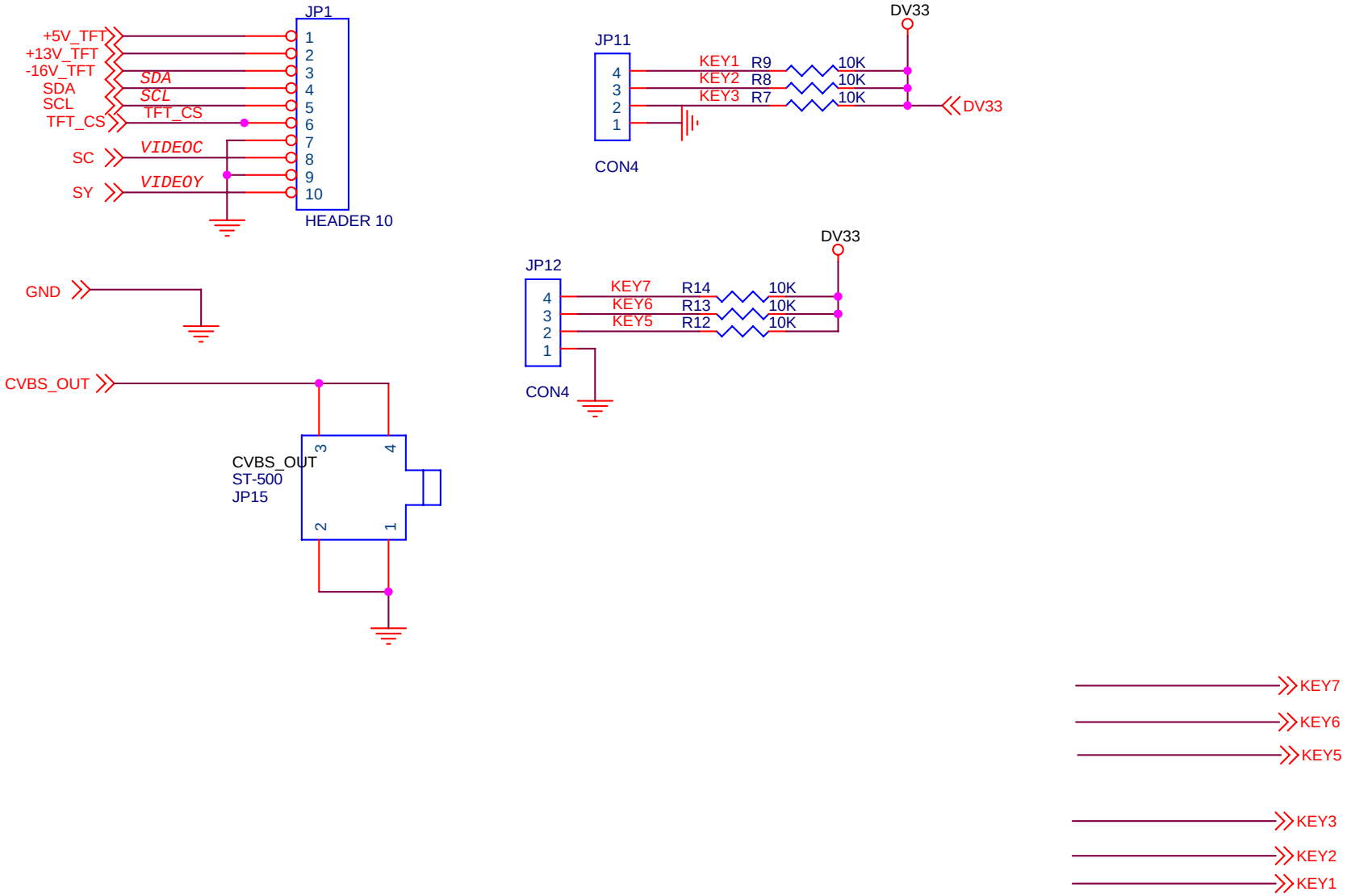

Title <Title>		
Size A	Document Number <Doc>	Rev <RevCode>
Date: Wednesday, July 13, 2005	Sheet 6 of 6	

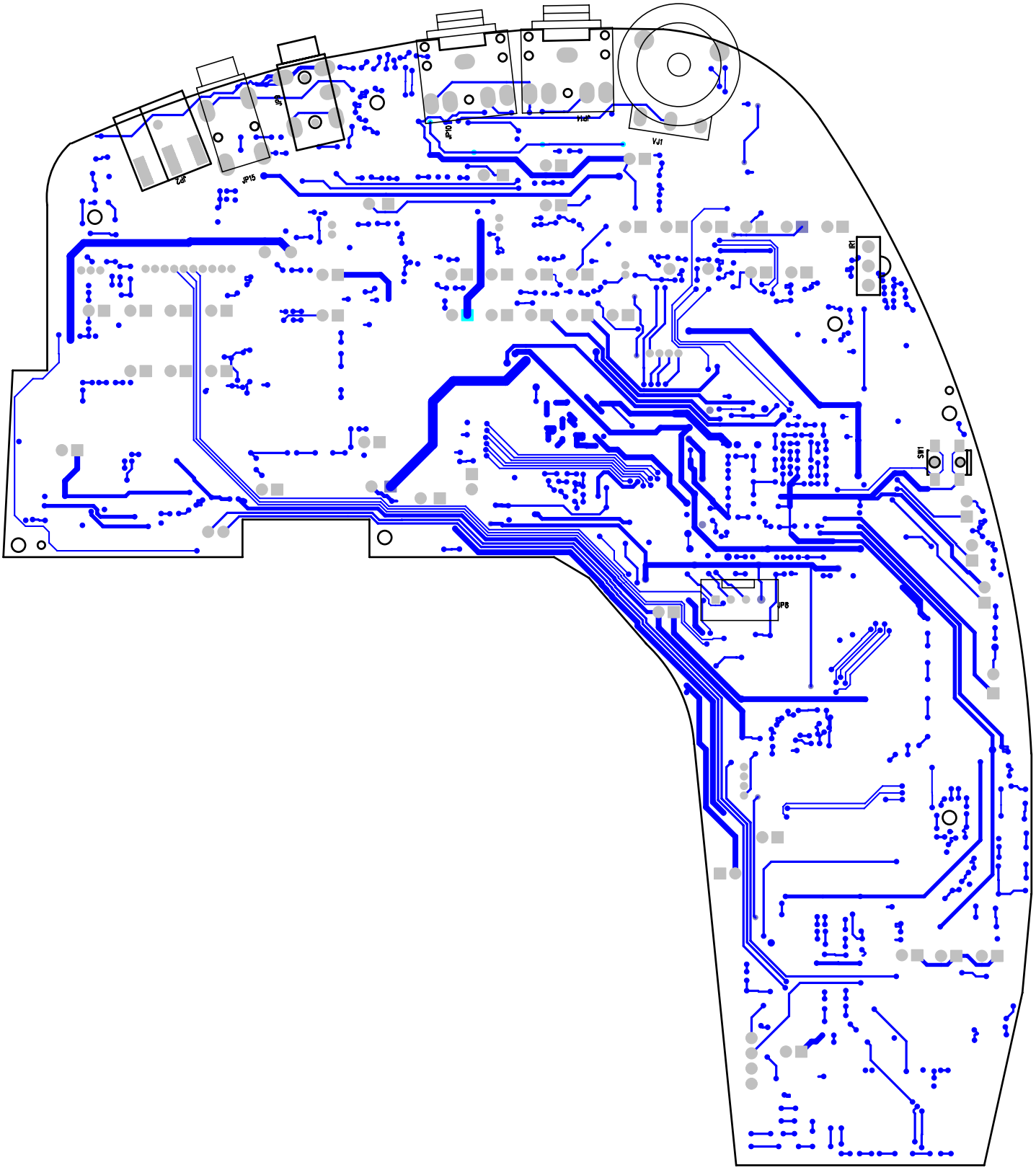

PD420_1389D_V1.3realse. - Thu May 25 16:17:06 2006

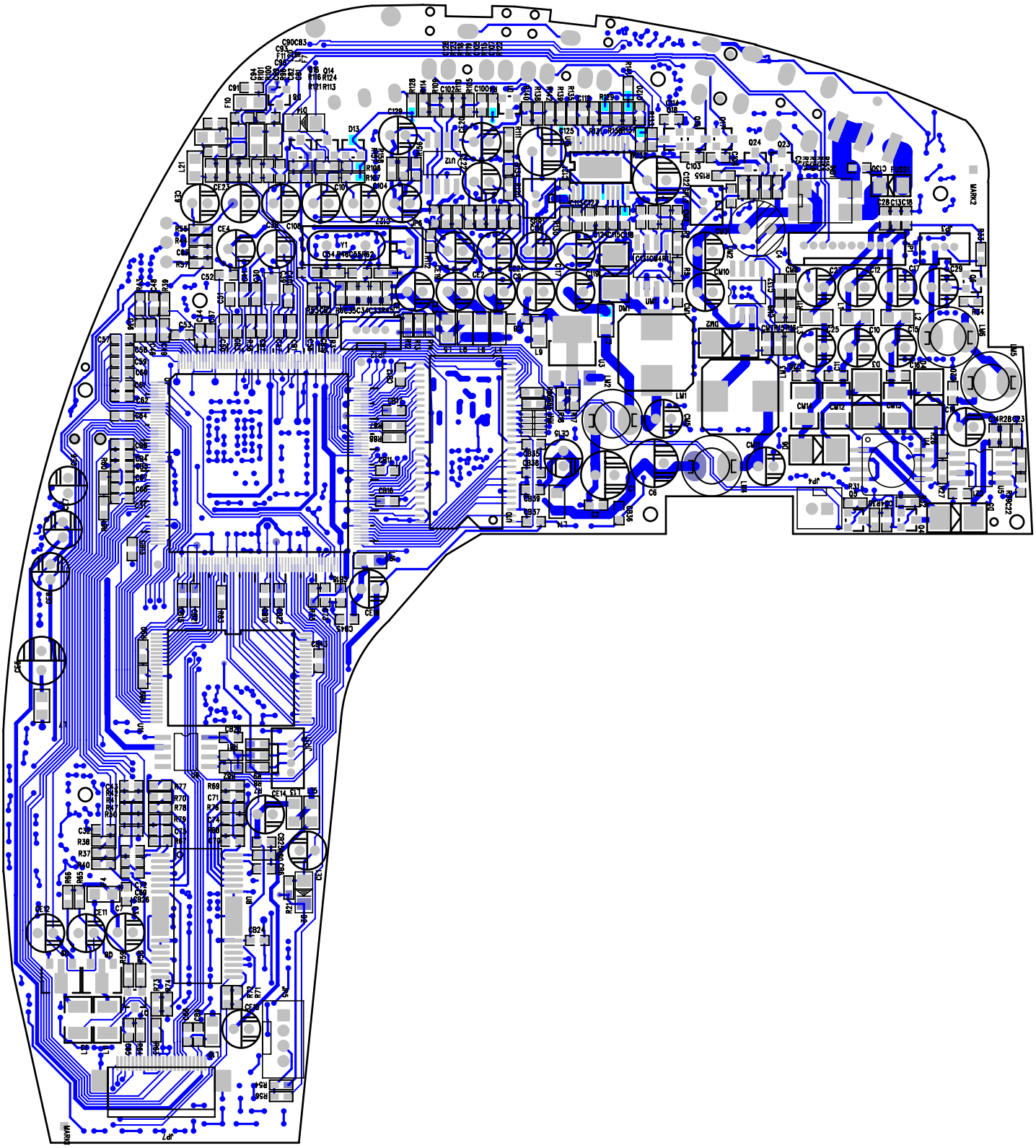

PD420_1389D_V1.3realse. - Thu May 25 16:17:57 2006

S2172-2 DRIVER BOM

ITEM	TYPE	PACKAGE. DESCRIPTION CODE	QUN	PCS	LOCATION	CORP
1	RESIST	RT0603-1/16W-100Ω±5%	5	PCS	R11,R39,R41,R42,R43	
2	RESIST	RT0603-1/16W-150Ω±5%	2	PCS	R27,R38	
3	RESIST	RT0603-1/16W-220Ω±5%	6	PCS	R19,R20,R21,R22,R28,	
4					R30	
5	RESIST	RT0603-1/16W-330Ω±5%	1	PCS	R23	
6	RESIST	RT0603-1/16W-390Ω±5%	3	PCS	R8,R9,R10	
7	RESIST	RT0603-1/16W-1k±5%	3	PCS	R5,R50,R53	
8	RESIST	RT0603-1/16W-2.4k±5%	2	PCS	R4,R44	
9	RESIST	RT0603-1/16W-3k±5%	2	PCS	R33,R47	
10	RESIST	RT0603-1/16W-3.3k±5%	1	PCS	R25	
11	RESIST	RT0603-1/16W-6.2k±5%	2	PCS	R26,R35	
12	RESIST	RT0603-1/16W-10k±5%	8	PCS	R6,R12,R15,R17，	
13					R31,R40,R49,R54	
14	RESIST	RT0603-1/16W-20k±5%	3	PCS	R3,R7,R45,	
15	RESIST	RT0603-1/16W-100k±5%	3	PCS	R32,R34,R37	
16	RESIST	RT0603-1/16W-1M±5%	1	PCS	R24	
17	RESIST	RT0603-1/16W-270Ω±5%	3	PCS	R18,R29,R36	
18	RESIST	RT0603-1/16W-33k±5%	3	PCS	R13,R14,R16	
19						
20	RESIST	CC0603-16V-30pF±5%	2	PCS	C16,C17	
21	RESIST	CC0603-16V-20pF±5%	6	PCS	C13,C18,C21,C23,C34,	
22					C59	
23	RESIST	CC0603-16V-33pF±5%	1	PCS	C19	
24	RESIST	CC0603-16V-82pF±5%	1	PCS	C20	
25	RESIST	CC0603-16V-100pF±5%	3	PCS	C10,C30,C42	
26	CAPACITOR	CC0603-16V-0.1uF	20	PCS	C14,C22,C24,C25,C26	
27					C28,C29,C31,C36,C40,	
28					C49,C50,C54,C55,C60,	
29					C61,C62,C68,C69,C71	
30	CAPACITOR	CC0603-16V-1uF	13	PCS	C1,C6,C7,C8,C9,	
31					C15,C27,C33,C37,C38,	
32					C46,C51,C52	
33						

TIEM	TYPE	PACKAGE. DESCRIPTION CODE	QUN	PCS	LOCATION	CORP
1	CAPACITOR	CC1206-25V-10uF	7	PCS	C3,C4,C5,C11,C12,C35,	
2					C39	
3	CAPACITOR	CC1210-25V-10uF	2	PCS	C2,C44	
4						
5	CAPACITOR	10uF/10V±10%	2	PCS	C32,C74	
6	CAPACITOR	47uF/16V±10% C TYPE	2	PCS	C41,C43,	
7	CAPACITOR	47uF/25V±10%	1	PCS	C56	
8	INDUCTOR	FB1210 10uH	2	PCS	L1,L4	
9	INDUCTOR	FB0805 8.2uH	1	PCS	L9	
10	INDUCTOR	FB1210线 12uH	1	PCS	L3	
11	INDUCTOR	0805 10uH	3	PCS	L5,L6,L7	
12	TRANSISTOR	2N3904 SOT23-3	3	PCS	Q1，Q6，Q7	
13	TRANSISTOR	8050 SOT23-3	1	PCS	Q10	
14						
15	IC	APL1117/3.3V	1	PCS	U1	
16	IC	VX1828V0	1	PCS	U2	
17	IC	3308L UTC	1	PCS	U3	
18	RESIST	0603 1kΩX4	2	PCS	U4,U5	
19	RESIST	0603 10KΩX4	2	PCS	U6,U7	
20	INDUCTOR	FB0603 10R	1	PCS	FB1	
21	INDUCTOR	FB0603 300R	1	PCS	L8	
22	INDUCTOR	FB1206 10R	1	PCS	FB4	
23	DIODE	7.5V DIODE	1	PCS	W2	
24		10k	1	PCS	VR1	
25	FPC	SMD32P/0.5W-A	1	PCS	SC1	
26	JACK	10P/1.25mm	1	PCS	J1	
27	CRYSTAL	20M 20ppm	1	PCS	X1	
28						
29						
30						
31						
32						
33						
34						
35						
36						

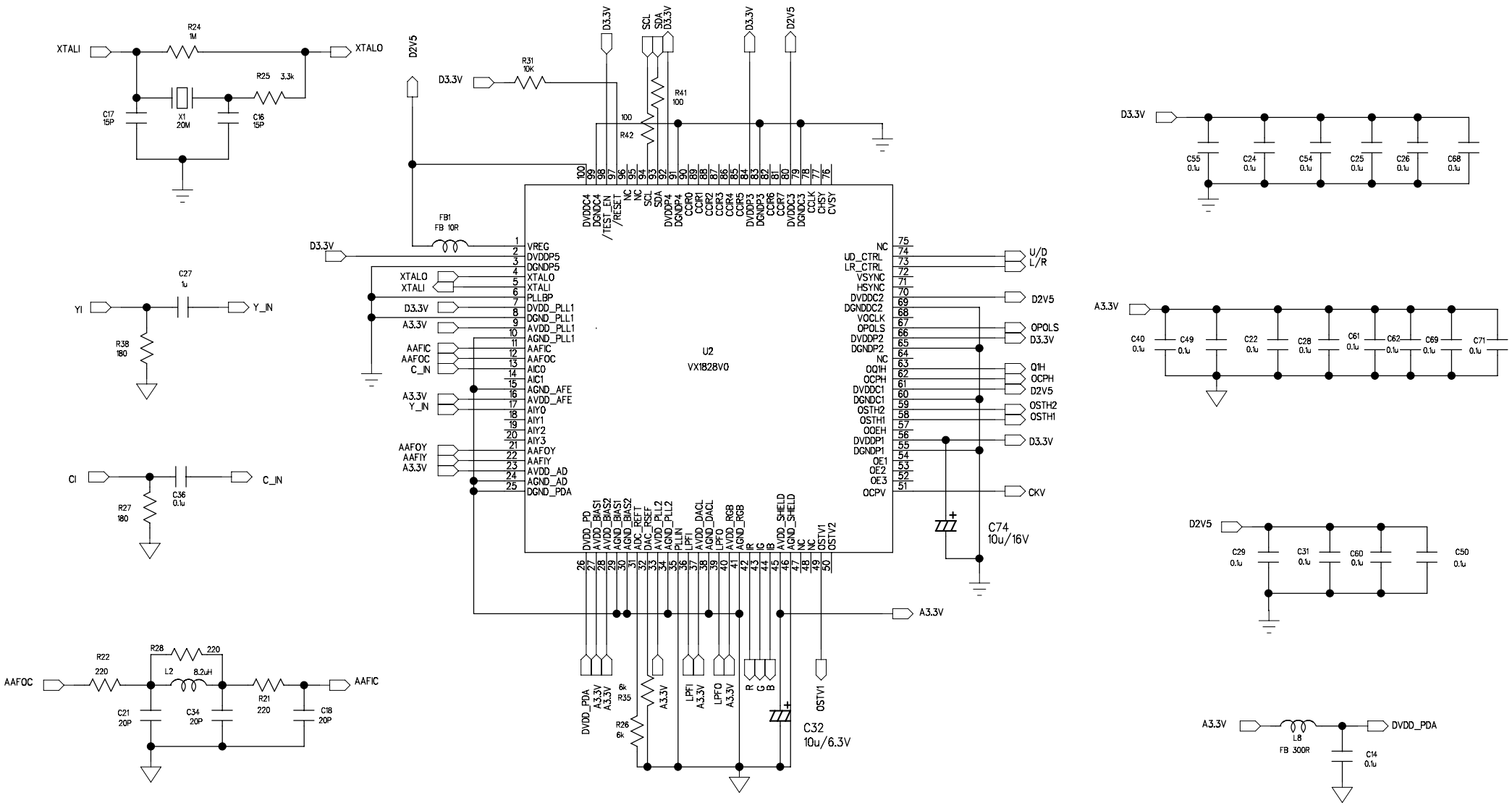

Shenzhen Challenge Technology Co.,Ltd		
Title: VX1828_Au7		
Size: A3	Drawing By:	Rev: 01
Tate: 2005 6 31	Sheet: 1 of 2	

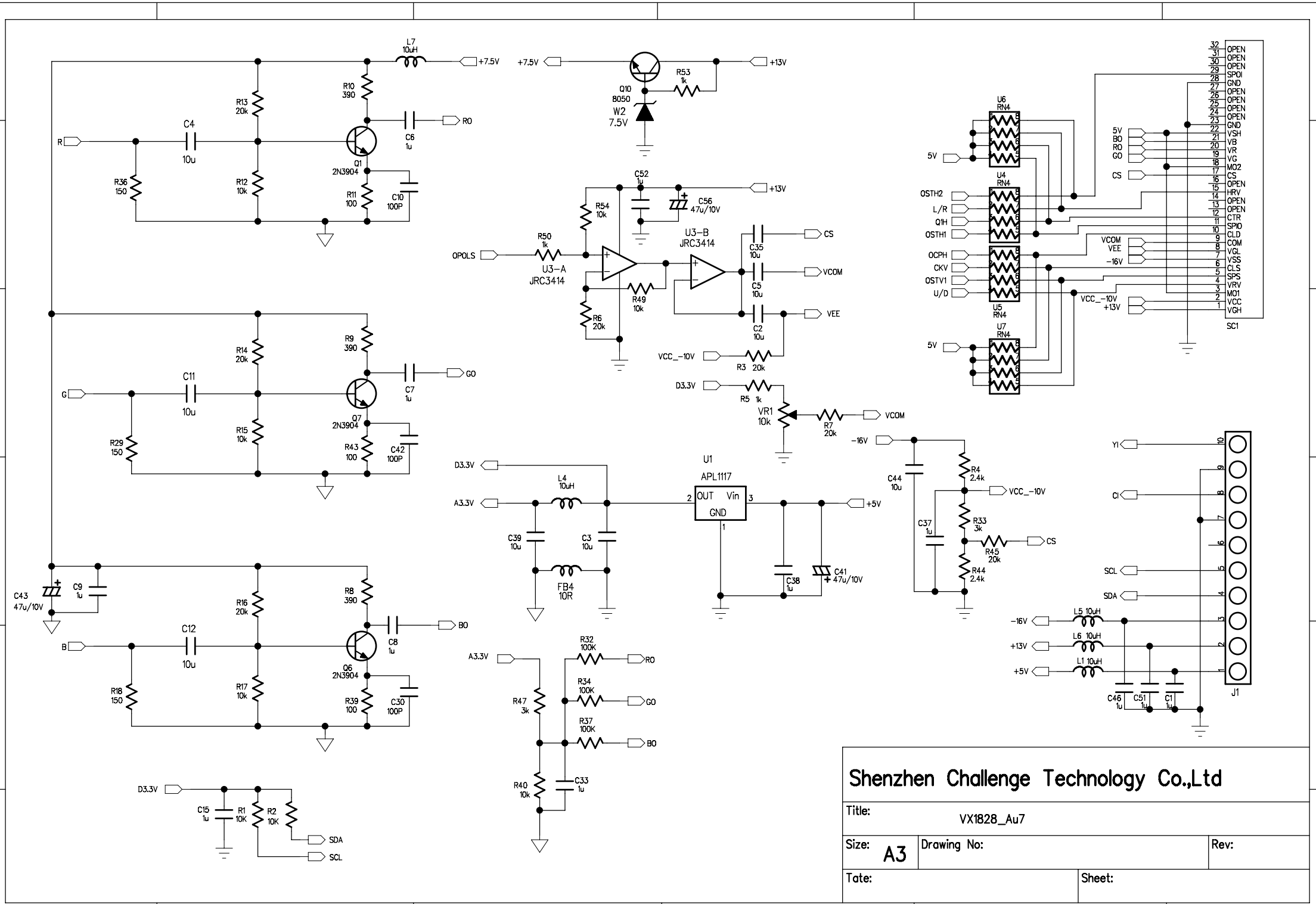

Shenzhen Challenge Technology Co.,Ltd

Title: VX1828_Au7		
Size: A3	Drawing No:	Rev:
Tate:	Sheet:	

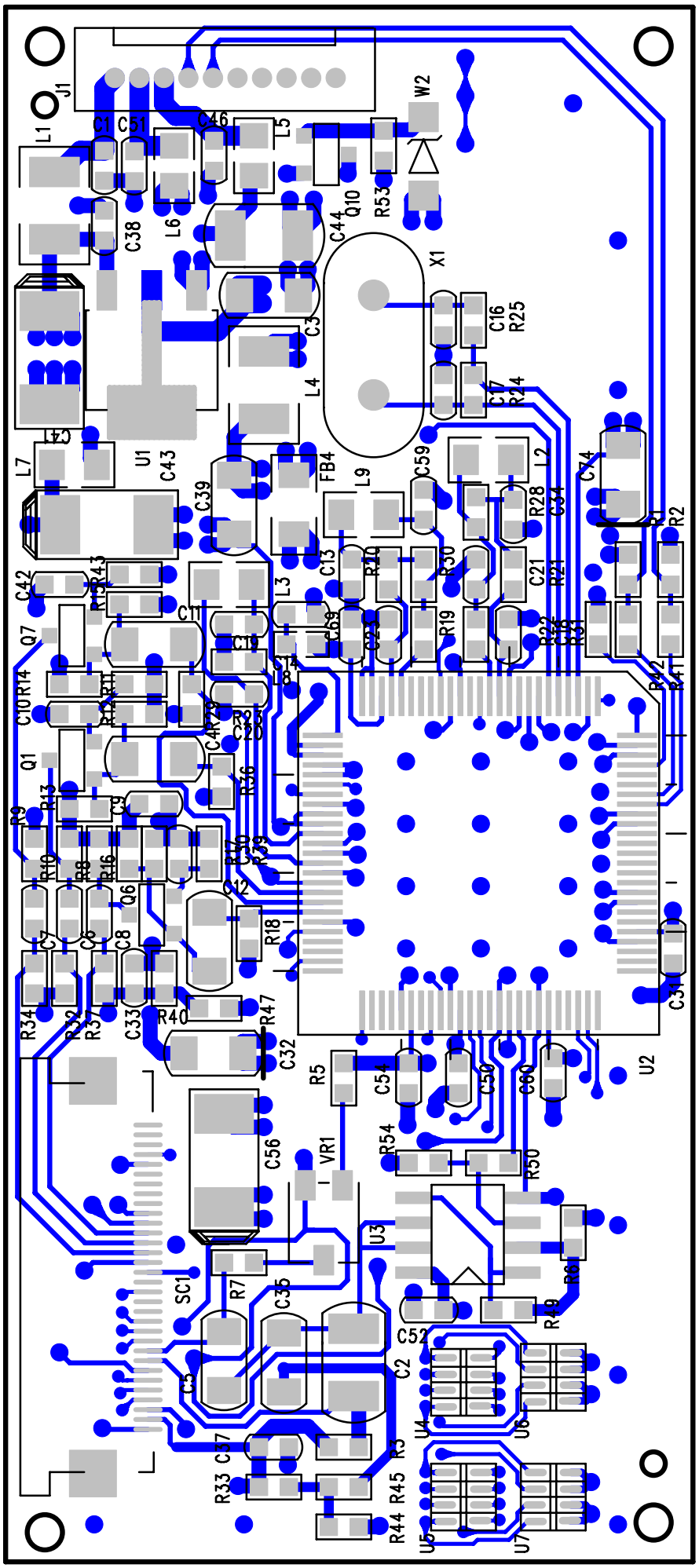

TFT_PD42_SHARP_V1_20050 - Thu May 25 16:14:32 2006

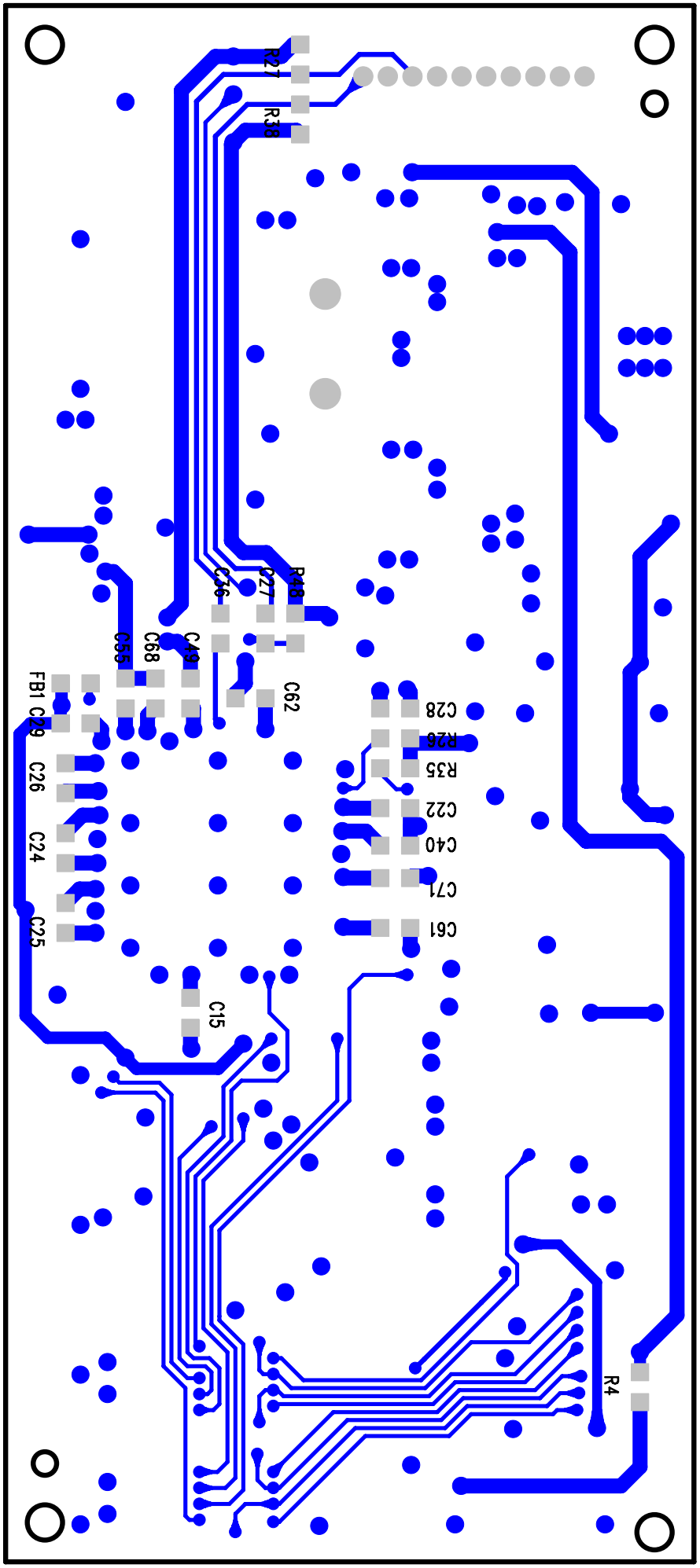

TFT_PD42_SHARP_V1_20050 - Thu May 25 16:15:49 2006

S2172-2 INVERTOR BOM

ITEM	TYPE	PACKAGE. DESCRIPTION CODE	QUN	PCS	LOCATION	CORP
1	RESIST	RT0603-1/16W-10Ω±5%	2	PCS	R1,R3	
2	RESIST	RT0603-1/16W-470Ω±5%	1	PCS	R7	
3	RESIST	RT0603-1/16W-2k7±5%	1	PCS	R6	
4	RESIST	RT0603-1/16W-39k±5%	1	PCS	R4	
5	RESIST	RT0603-1/16W-120k±5%	1	PCS	R5	
6	RESIST	RT0805-1/16W-0Ω±5%	1	PCS	FB	
7	CAPACITOR	CC0603-16V-102±10%	1	PCS	C5	
8	CAPACITOR	CC0603-16V-104±10%	2	PCS	C2,C4	
9	CAPACITOR	CC0603-16V-474±10%	1	PCS	C7	
10	CAPACITOR	CC0603-16V-105±10%	1	PCS	C3	
11	CAPACITOR	CC1210-25V-106±10%	1	PCS	C1	
12	CAPACITOR	47μF/16V, C	1	PCS	C6	
13	CAPACITOR	MKP62-0.22μF	1	PCS	C8	
14	CAPACITOR	XC44CG3F220K-BS	1	PCS	C9	
15	INDUCTOR	27μH CR54	1	PCS	L1	
16	INDUCTOR	47μH CR54	1	PCS	L2	
17	DIODE	RB063L-30 (1518)	1	PCS	D1	
18	TRANSISTOR	2SC4672 (SOT-89)	2	PCS	Q2,Q3	
19	IC	CEM9453 (SO-8)	1	PCS	U1	
20	IC	R1224N223H (SOT-23-5)	1	PCS	IC1	
21	FUSE	2A 1206	1	PCS	F1	
22	TRANSFORM	SMD-UI11.7(B1)	1	PCS	T1	
23	JACK	3PIN/1.25mm/SOJ	1	PCS	CN1	
24						
25						
26						
27						
28						
29						
30						
31						
32						
33						

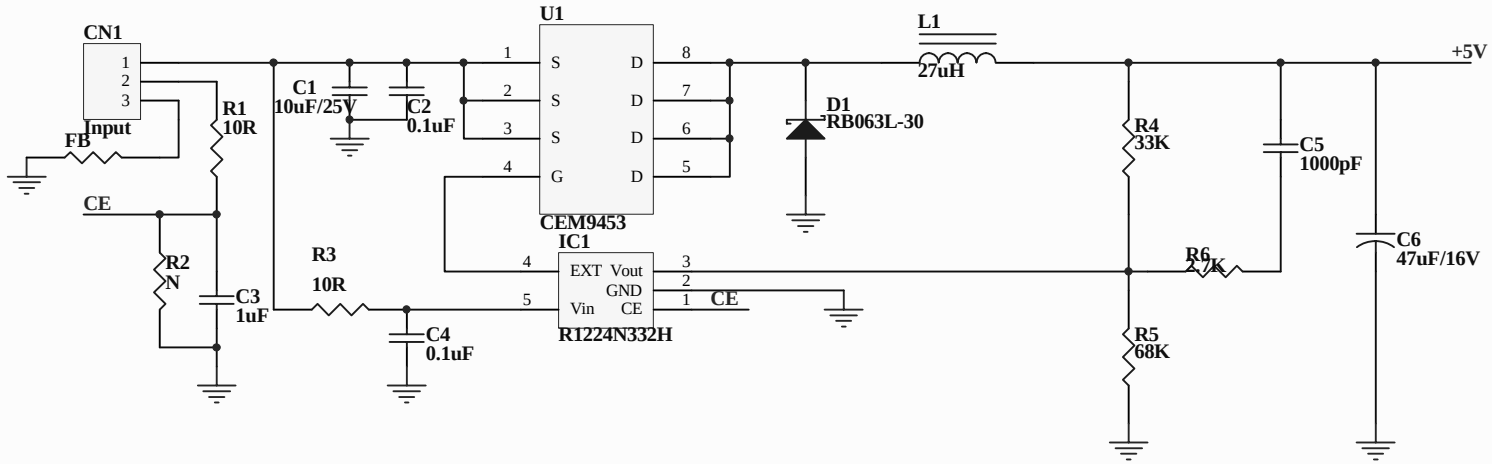

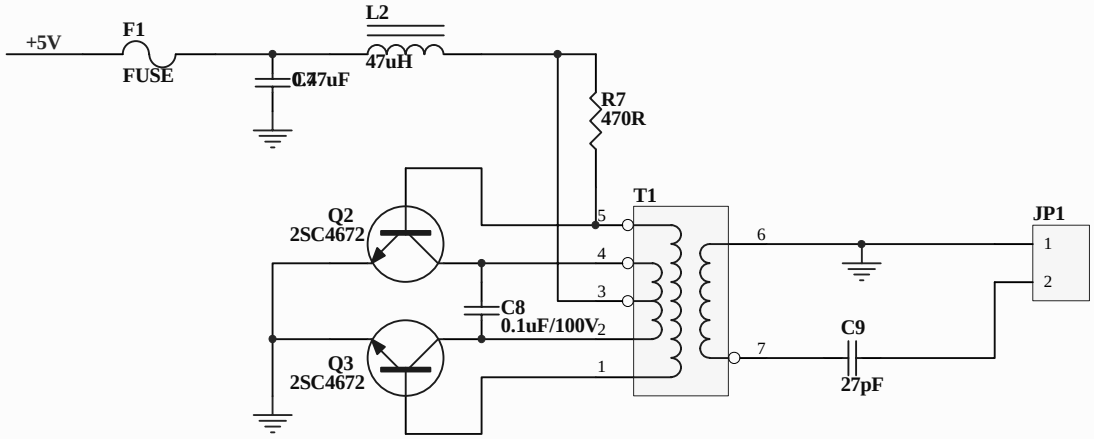

Title		
Size A4	Number	Revision
Date: 3-Aug-2006	Sheet of	
File: D:\星球产品\便携式DVD\PD420S\PD420S.ddb	Drawn By:	

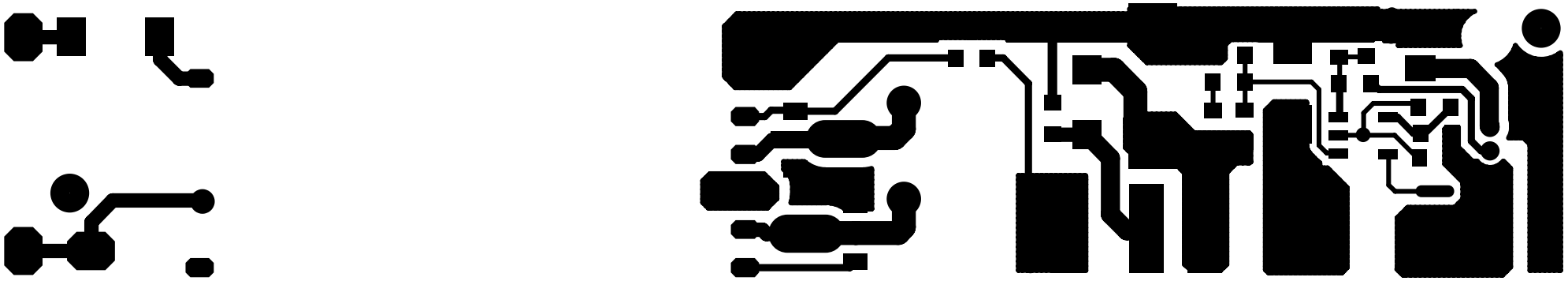

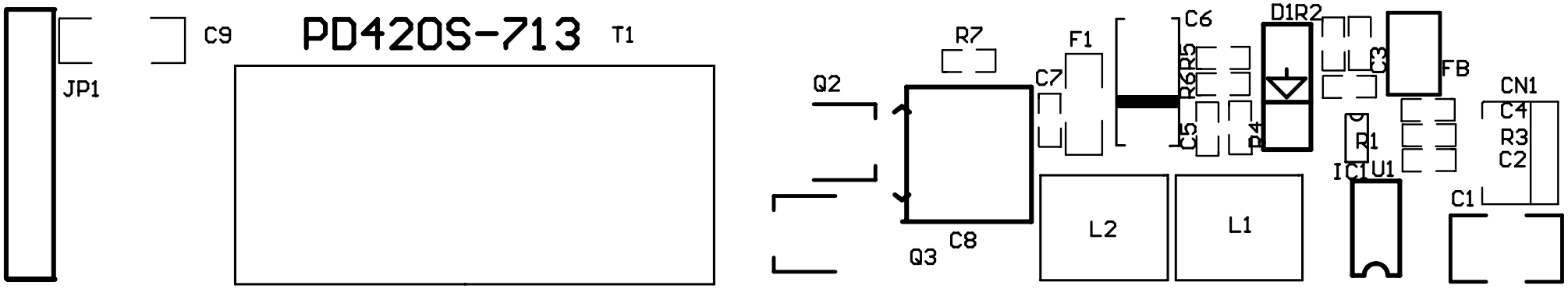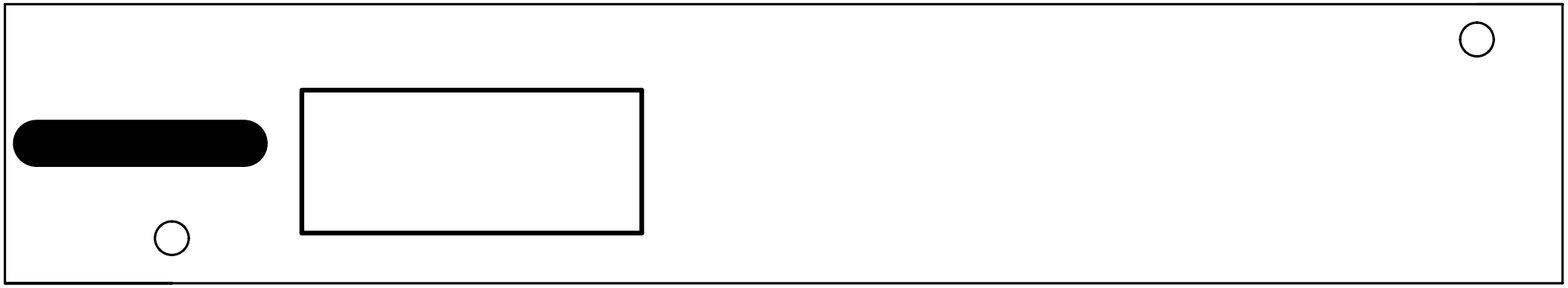
JP1
C9
PD420S-713
T1
Q2
R7
C7
F1
C6
R6
R5
C5
R4
D1
R2
C3
FB
CN1
C4
R3
C2
R1
IC1
U1
C1
Q3
C8
L2
L1